Thin Film Problems in Superconductivity

John W. Barrett[1] and Leonid Prigozhin[2]

[1]Imperial College, London, UK

[2]Blaustein Institutes for Desert Research
Ben-Gurion University of the Negev, Israel

Introduction

Macroscopically, magnetization of type-II superconductors is modeled as an eddy current problem with a highly non-linear $e(j)$ relation making it a free boundary problem. Typically,

- Power law: $\boldsymbol{e} = e_0 \left(\frac{j}{j_c}\right)^{p-2} \frac{\boldsymbol{j}}{j_c}$, where, usually, $10 < p < 100$
- The Bean critical-state model: the $p \to \infty$ limit.

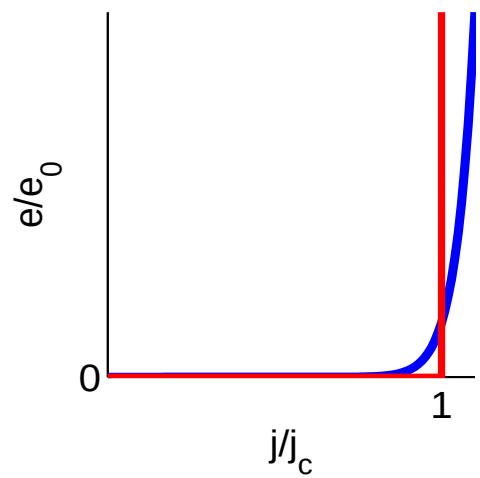

A variety of numerical methods have been used to compute the magnetic field and the current density. The electric field is also needed but is often the most difficult to compute.

Magnetization problems

Let $\Omega \subset R^2$ be a Lipschitz domain, the film occupy $\Omega \times \{x_3 = 0\} \subset R^3$, and $b_e(t)$ be the normal to film component of a uniform external magnetic field.

<u>Biot-Savart law</u>: $b_3(\boldsymbol{x}, t) = b_e(t) + \frac{1}{4\pi} \nabla \times \int_\Omega \frac{\boldsymbol{j}(\boldsymbol{y},t)}{|\boldsymbol{x}-\boldsymbol{y}|}\, d\boldsymbol{y}$

<u>Faraday law</u>: $\partial_t b_3(\boldsymbol{x}, t) = -\nabla \times \boldsymbol{e}(\boldsymbol{x}, t)$

Here $\boldsymbol{x} = \{x_1, x_2\} \in \Omega$, b_3 is the normal to film component of the total magnetic field, $\boldsymbol{e}$ the tangential to film component of the electric field, and $\boldsymbol{j}$ the sheet current density.

These equations yield:

$$-\nabla \times \boldsymbol{e} = \partial_t b_e + \frac{1}{4\pi} \nabla \times \int_\Omega \frac{\partial_t \boldsymbol{j}(\boldsymbol{y}, t)}{|\boldsymbol{x} - \boldsymbol{y}|}\, d\boldsymbol{y}$$

Magnetization problems

$$-\nabla \times \boldsymbol{e} = \partial_t b_e + \frac{1}{4\pi} \nabla \times \int_\Omega \frac{\partial_t \boldsymbol{j}(\boldsymbol{y}, t)}{|\boldsymbol{x} - \boldsymbol{y}|} \, d\boldsymbol{y}$$

We assume first Ω is simply connected. Since $\boldsymbol{\nabla} \cdot \boldsymbol{j} = 0$ and $\boldsymbol{j}_n|_{\partial\Omega} = 0$, there exists a stream function w s.t.

$$\boldsymbol{j} = \boldsymbol{\nabla} \times w, \quad w|_{\partial\Omega} = 0$$

Let $\boldsymbol{q} = [e_2, -e_1]^T$. Then $\nabla \times \boldsymbol{e} = \partial_{x_1} e_2 - \partial_{x_2} e_1 = \boldsymbol{\nabla} \cdot \boldsymbol{q}$, so

$$\frac{1}{4\pi} \nabla \times \int_\Omega \frac{1}{|\boldsymbol{x} - \boldsymbol{y}|} \boldsymbol{\nabla} \times \partial_t w(\boldsymbol{y}, t) \, d\boldsymbol{y} + \boldsymbol{\nabla} \cdot \boldsymbol{q}(\boldsymbol{x}, t) = f,$$

where $f = -\partial_t b_e$.

To complete this electrodynamic model, a current-voltage relation should be supplemented.

We employ the multi-valued Bean model relation (Bean 64)

The Bean model

$$|\boldsymbol{j}| \leq j_c, \quad |\boldsymbol{j}| < j_c \Rightarrow \boldsymbol{e} = \mathbf{0}, \quad \mathbf{e} \neq \mathbf{0} \Rightarrow \mathbf{e} \| \mathbf{j}$$

Substituting $\boldsymbol{j} = \boldsymbol{\nabla} \times w$, noting that $|\boldsymbol{j}| = |\nabla w|$ and replacing $\boldsymbol{e}$ by $\boldsymbol{q}$ we get

$$|\boldsymbol{\nabla} w| \leq j_c, \quad |\boldsymbol{\nabla} w| < j_c \Rightarrow \boldsymbol{q} = \mathbf{0}, \quad \mathbf{q} \neq \mathbf{0} \Rightarrow \mathbf{q} \| -\nabla \mathbf{w}$$

This constitutive relation can be reformulated as

$$|\boldsymbol{\nabla} w| \leq j_c, \quad j_c |\boldsymbol{q}| + \boldsymbol{\nabla} w \cdot \boldsymbol{q} = 0 \text{ in } \Omega$$

If ϕ satisfies $|\boldsymbol{\nabla} \phi| \leq j_c$ in Ω then $j_c |\boldsymbol{q}| + \boldsymbol{\nabla} \phi \cdot \boldsymbol{q} \geq 0$ and

$$\boldsymbol{\nabla}(\phi - w) \cdot \boldsymbol{q} \geq 0 \text{ in } \Omega$$

This allows to exclude $\boldsymbol{q}$ and yields a variational inequality for the stream function alone (LP 98).

Variational formulation I: primal

Find $w \in L^\infty(0,T;K) \cap H^1(0,T;H_{00}^{1/2}(\Omega))$ s.t. $w|_{t=0} = w^0$ and

$$\forall \phi \in K, \quad a(\partial_t w, \phi - w) - (f, \phi - w) \geq 0 \quad \forall \phi \in K$$

for a.e. t. Here $K = \{\phi \in W_0^{1,\infty} \ : \ |\boldsymbol{\nabla}\phi| \leq j_c$ a.e. in $\Omega\}$
and the bilinear form

$$a(\psi, \phi) = \frac{1}{4\pi} \int_\Omega \int_\Omega \frac{\boldsymbol{\nabla}\psi(\boldsymbol{x}) \cdot \boldsymbol{\nabla}\phi(\boldsymbol{y})}{|\boldsymbol{x} - \boldsymbol{y}|} \, d\boldsymbol{x} \, d\boldsymbol{y}$$

is coercive on $H_{00}^{1/2}(\Omega) \times H_{00}^{1/2}(\Omega)$.
There is a unique solution (Barrett and LP 00); the problem was solved numerically (LP 98).
However, although $\boldsymbol{j} = \boldsymbol{\nabla} \times w$ is found, the Bean multi-valued current-voltage relation inhibits determining the electric field.

Reformulation

Alternatively, the Bean model $\boldsymbol{e}(\boldsymbol{j})$ relation,

$$|\boldsymbol{\nabla} w| \leq j_c, \quad |\boldsymbol{\nabla} w| < j_c \Rightarrow \boldsymbol{q} = \mathbf{0}, \quad \mathbf{q} \neq \mathbf{0} \Rightarrow \mathbf{q} \| -\boldsymbol{\nabla}\mathbf{w},$$

can also be presented as

$$j_c(|\boldsymbol{v}| - |\boldsymbol{q}|) + (\boldsymbol{v} - \boldsymbol{q}) \cdot \boldsymbol{\nabla} w \geq 0, \forall \boldsymbol{v}.$$

Our mixed formulation, written for the two variables, w and $\boldsymbol{q}$, consists of a weak form of this inequality and of the electrodynamic equation derived above.

The electric field can be singular.

Let $\mathcal{M} = C^*(\overline{\Omega})$ be the set of bounded Radon measures, we seek $\boldsymbol{q} = [e_2, -e_1]^T$ in the space of vectorial measures having a generalized divergence:

$$\boldsymbol{q}(.,t) \in \boldsymbol{Z}^{\mathcal{M}}(\Omega) := \{\boldsymbol{v} \in [\mathcal{M}]^2 \ : \ \boldsymbol{\nabla} \cdot \boldsymbol{v} \in [H_{00}^{1/2}(\Omega)]^*\}$$

Variational formulation II: mixed

Find $w \in H^1(0,T;H_{00}^{1/2}(\Omega))$ and $\boldsymbol{q} \in L^2(0,T;\boldsymbol{Z}^{\mathcal{M}}(\Omega))$ s.t.

$$w|_{t=0} = w^0 \text{ and}$$

$$\int_0^T \left[a(\partial_t w, \phi) + \langle \boldsymbol{\nabla} \cdot \boldsymbol{q}, \phi \rangle_{H_{00}^{1/2}(\Omega)} - (f, \phi) \right] dt = 0$$

$$\forall \phi \in L^2(0,T;H_{00}^{1/2}(\Omega)),$$

$$\int_0^T \left[\langle |\boldsymbol{v}| - |\boldsymbol{q}|, j_c \rangle_{C(\overline{\Omega})} - \langle \boldsymbol{\nabla} \cdot (\boldsymbol{v} - \boldsymbol{q}), w \rangle_{H_{00}^{1/2}(\Omega)} \right] dt \geq 0$$

$$\forall \boldsymbol{v} \in L^2(0,T;\boldsymbol{Z}^{\mathcal{M}}(\Omega))$$

Here $\langle .,. \rangle_X$ is the duality pairing between X and X^* elements.

Existence

Under some technical assumptions, the following results were obtained (Barrett and LP 13):

1. First, the non-differentiable term in the derived mixed formulation (M) was approximated: $|\boldsymbol{q}| \approx \frac{1}{r}|\boldsymbol{q}|^r,\ r > 1.$ The approximate problem, (M_r), is a mixed formulation of the model with the power law relation,
$$\boldsymbol{e}(\boldsymbol{j}) \sim |\boldsymbol{j}/j_c|^{p-2}\boldsymbol{j}/j_c,$$
where $1/p + 1/r = 1$, and is of interest in its own right. Existence and uniqueness for (M_r) were proved.

2. Second, subsequence convergence of (M_r) to (M) as $r \to 1$ was shown. This proves convergence of the power law model to the critical-state model as $p \to \infty$ and the existence for (M). In addition, if $\{w, \boldsymbol{q}\}$ is a solution to (M) then w solves the primal variational inequality and, therefore, is unique.

Numerical solution

Several finite element approximation schemes have been compared for the discretized in time approximate problem (M_r), corresponding to the power law model. The best results were obtained for the non-conforming piecewise linear element for w and piecewise constant approximation for $\boldsymbol{q}$. Convergence (weak) has been proved (Barrett and LP 13).

Arising nonlinear algebraic equations were solved iteratively on each time layer. The method was stable for arbitrary high power p in the $\boldsymbol{e}(\boldsymbol{j})$ power law relation. The number of iterations was almost independent of the number of finite elements and the power p; for high p values we obtained accurate approximations to both the current density $\boldsymbol{j} = \boldsymbol{\nabla} \times w$ and the electric field $\boldsymbol{e} = [-q_2, q_1]$ in the critical-state model.

Dense matrix resulting from the discretization of $a(.,.)$ makes the solution time and memory consuming for fine meshes.

Simulations. 1: Accuracy

All results are presented in dimensionless variables; in our examples we assumed the zero initial state $(w^0 = 0)$ and set $b_e = t$. The p.-w. constant current density was, in each element, computed as the curl of w.

Thin disk: for the Bean model the analytical solution is known (Mikheenko and Kuzovlev 93). We set $p = 1000$ in the power law and solved the problem numerically in a unit circle, using two f.e. meshes (the maximal element sizes were $h = 0.06$ and $h = 0.03$). For $b_e = 0.65$ the errors were:

h	$\delta(j)\%$	$\delta(e)\%$
0.06	0.15	0.31
0.03	0.06	0.24

2: Corners and indentations

The electric field is strong near the boundary indentations and, especially, in vicinity of concave film corners (Schuster, Kuhn and Brandt 1996, Vestgarden et al. 2007). In our simulation we used a power law with $p = 1000$ and $b_e(t) = t$. The mesh contained about 9000 elements and was refined near the film boundary:

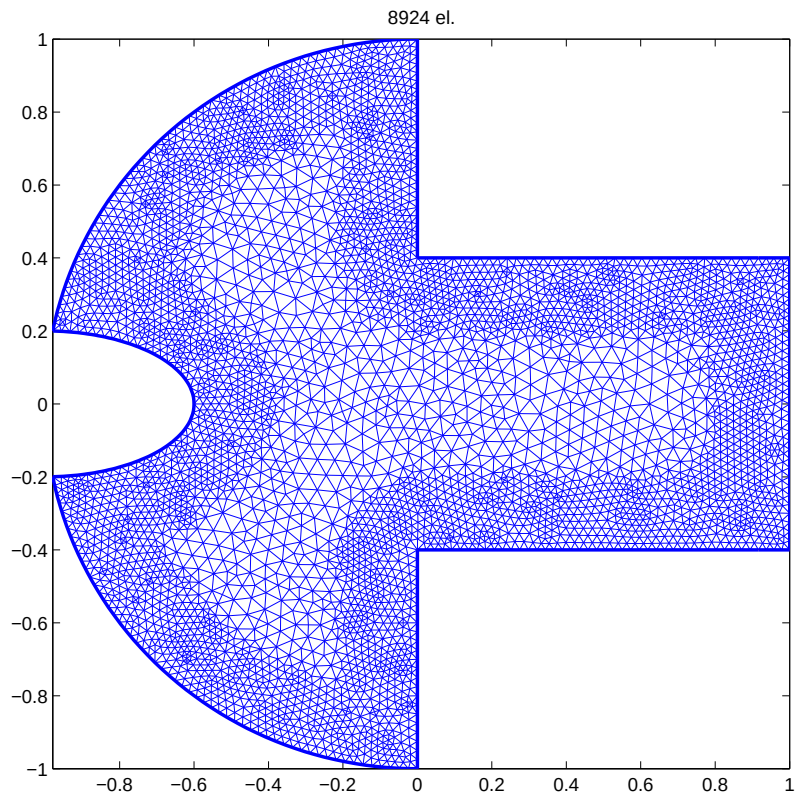

2: Corners and indentations

Electric field $|\boldsymbol{e}|$ (shown for $b_e = 0.4$)

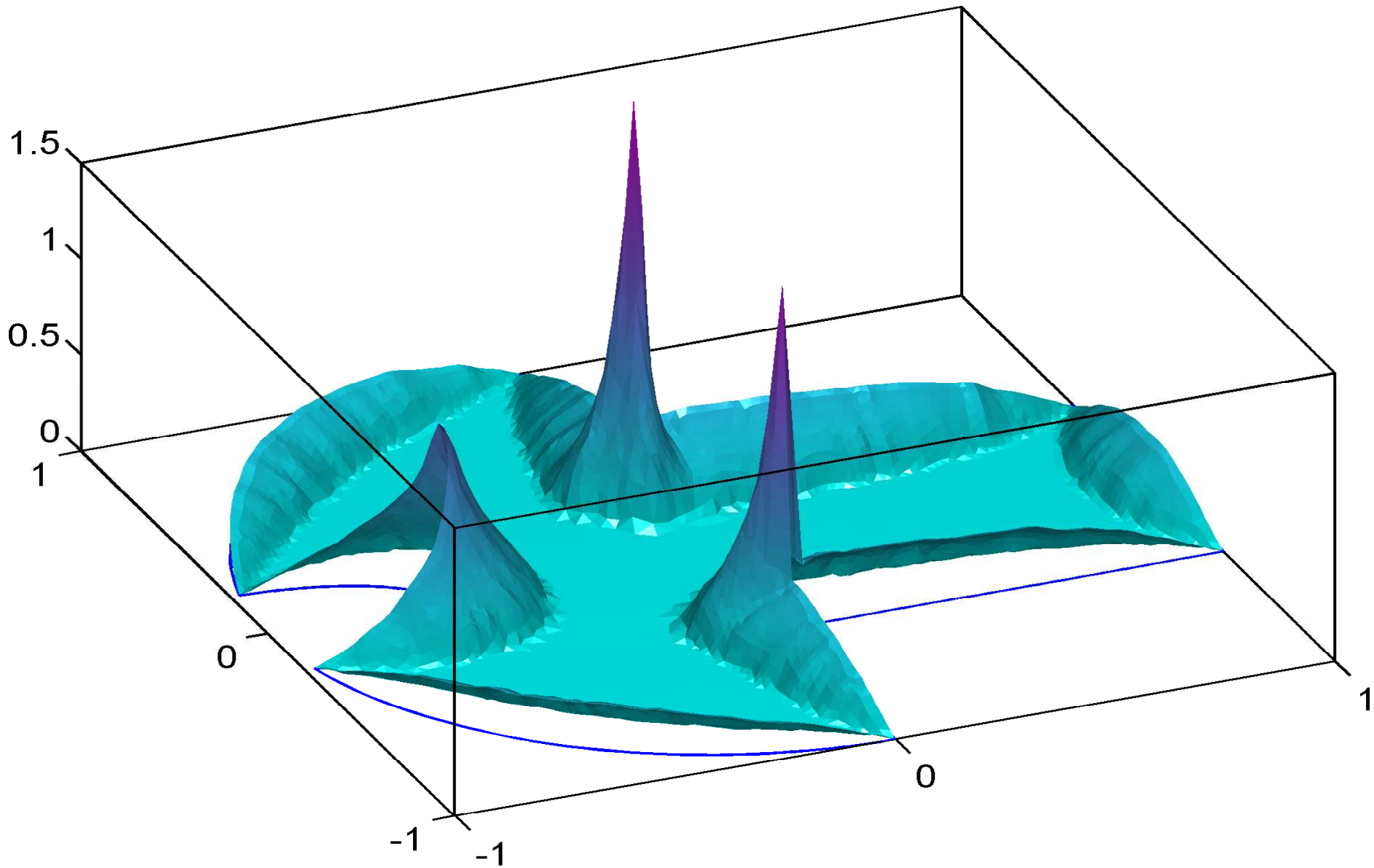

2: Corners and indentations

Normal magnetic field level contours, $b_e = 0.4$,
computed via the Biot-Savart law

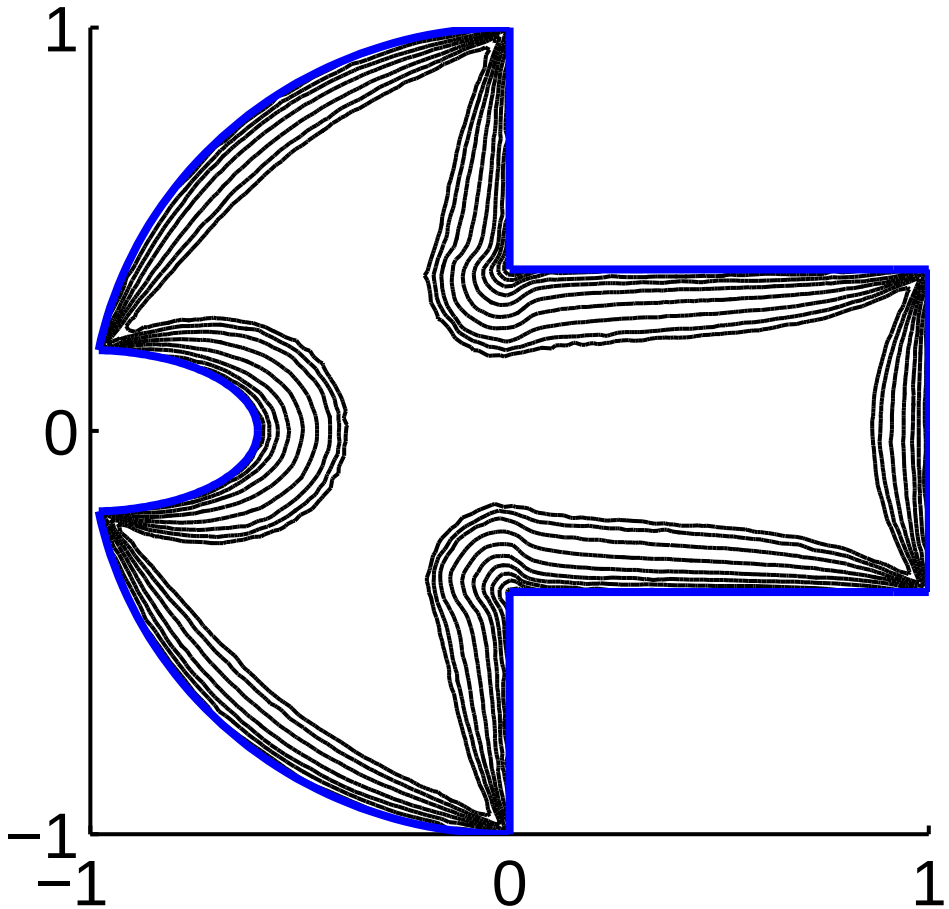

2: Corners and indentations

Current streamlines, $b_e = 0.4$

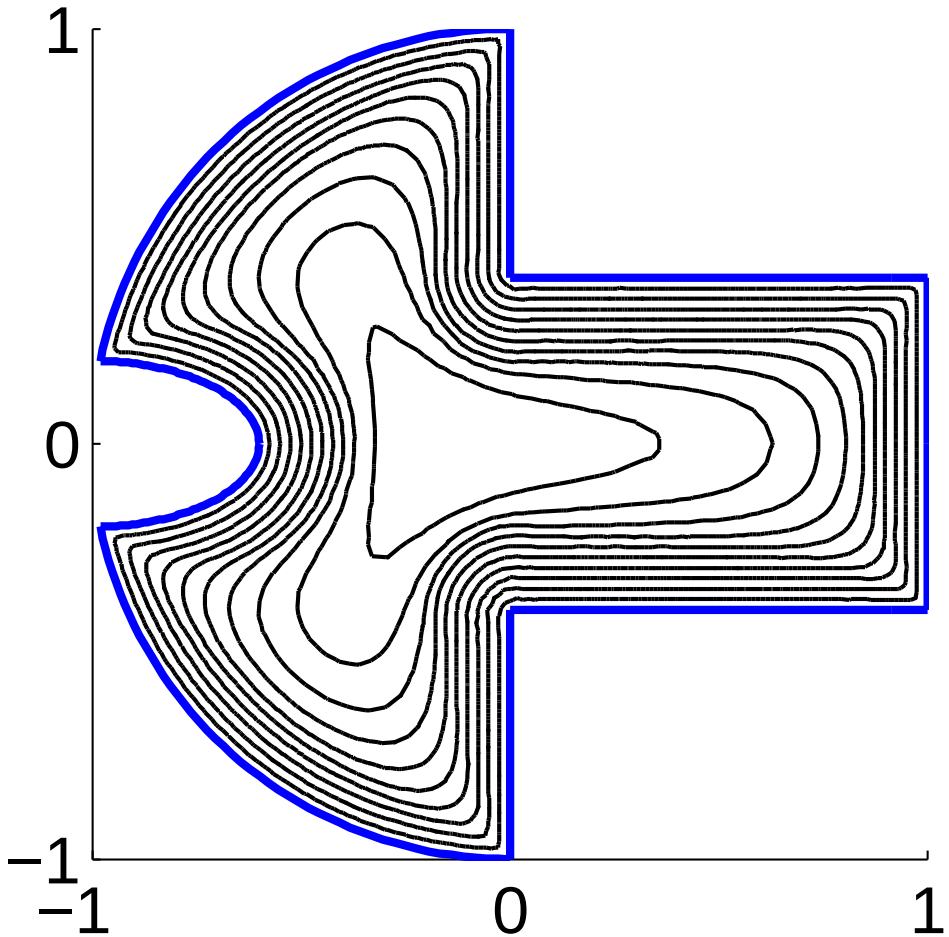

3: Inhomogeneous film

The electric field near the boundaries between regions of different critical current densities can be orders of magnitude higher than in the other film parts. Example: $p = 1000$ and $b_e(t) = t$. Two regions: the rectangular area with $j_c = 0.5$; in the rest of the film $j_c = 1$. Mesh (10.6 thousand el.):

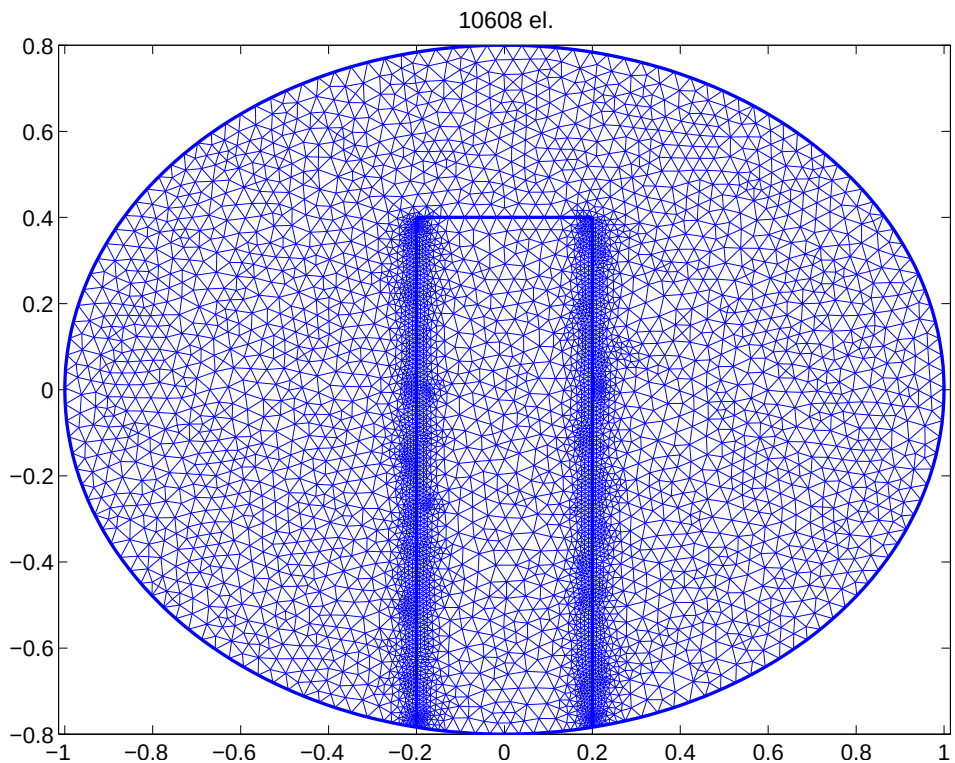

3: Inhomogeneous film

Electric field $|\boldsymbol{e}|$ (shown for $b_e = 0.5$)

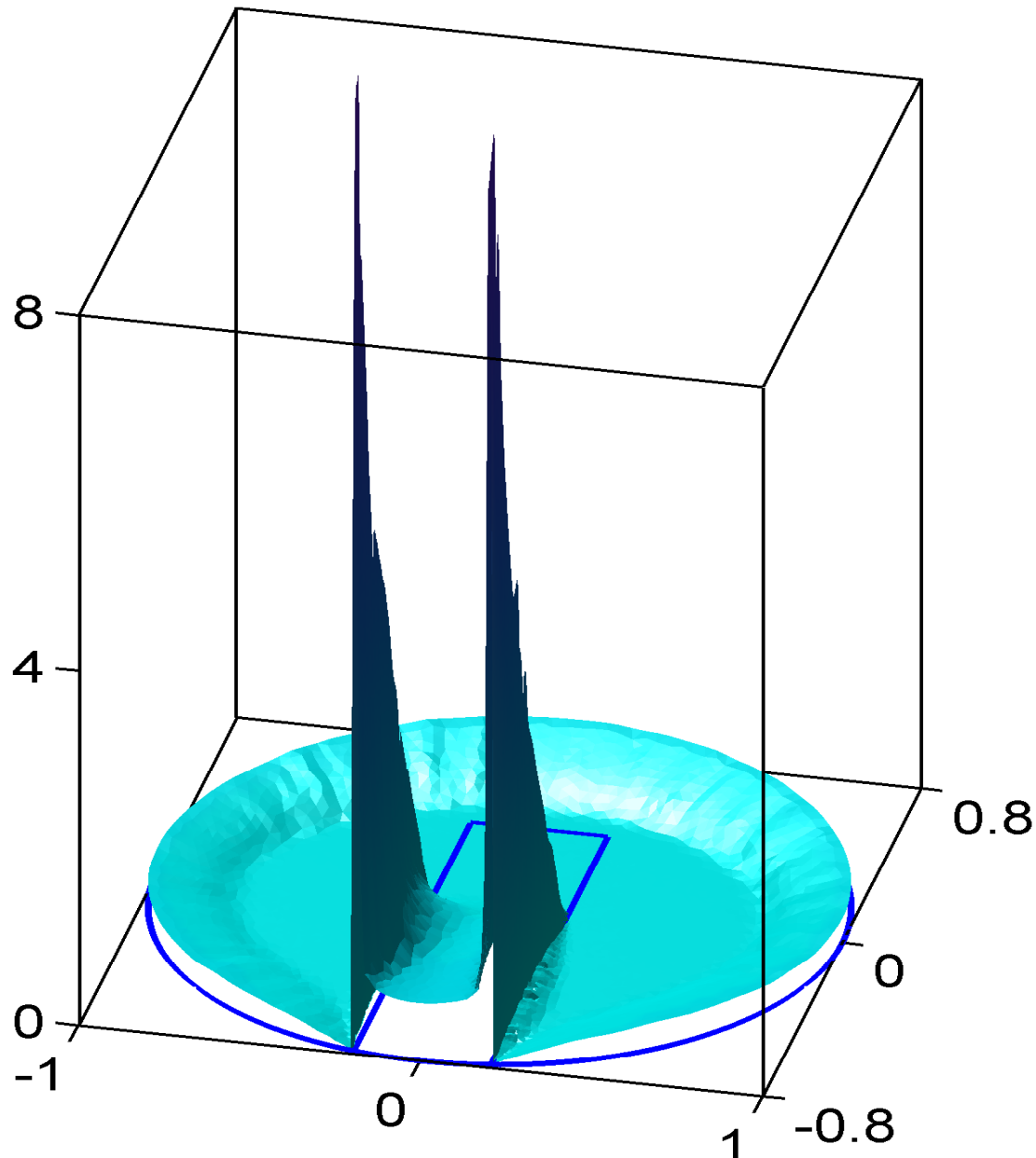

3: Inhomogeneous film

Level contours of the normal to film magnetic field; $b_e = 0.5$

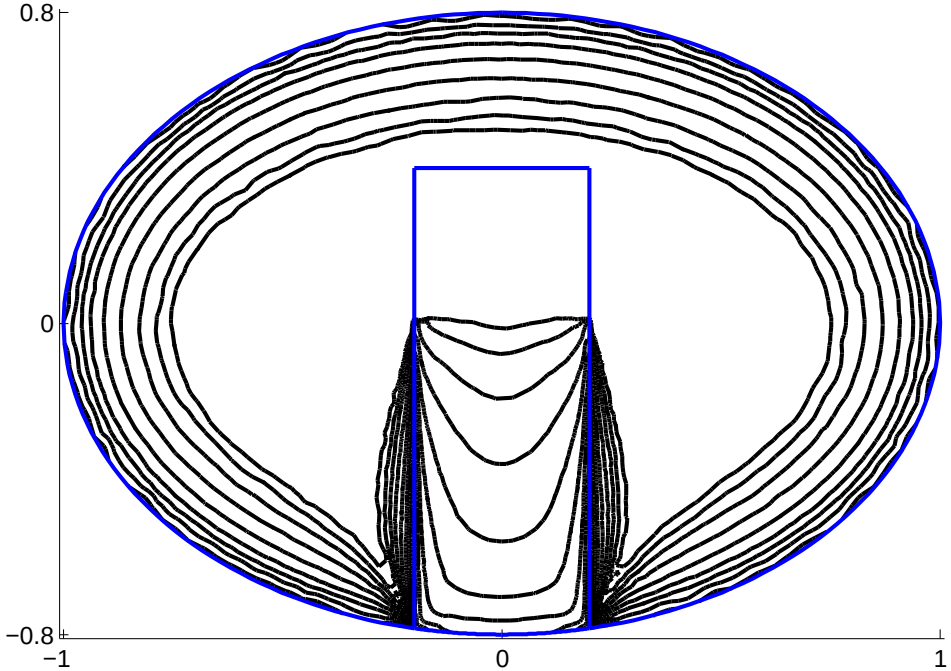

The penetration is deeper in the lower j_c area.

3: Inhomogeneous film

Current streamlines, $b_e = 0.5$

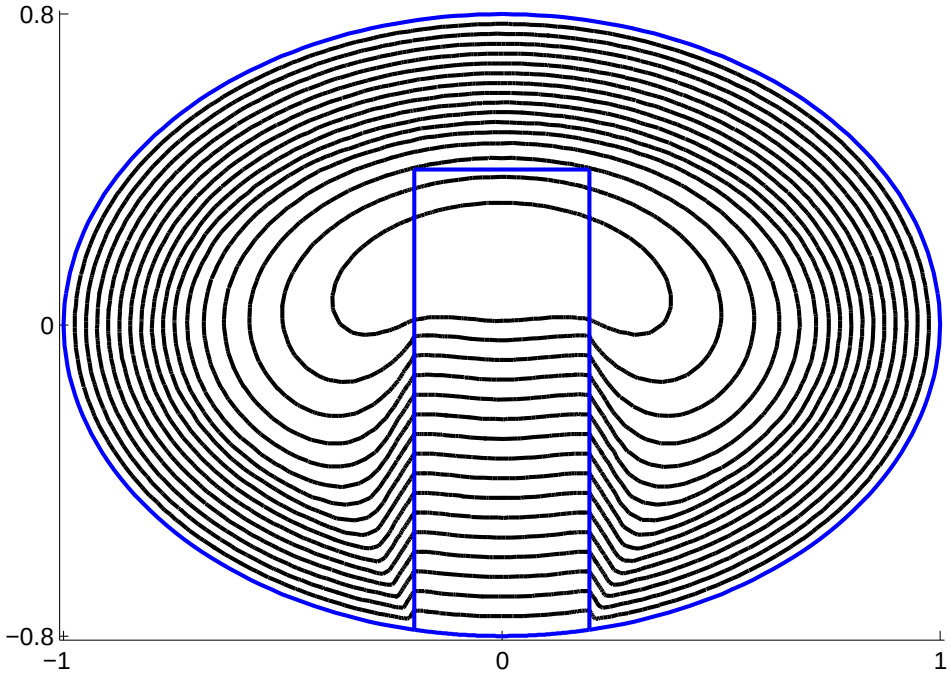

4: Film with three holes

To solve this problem we set $j_c = 0.002$ in the holes. Flux penetration into the holes causes very strong electric field along the penetration paths. In this example: $p = 100$ and $b_e(t) = t$. Mesh (10.4 thousand el.):

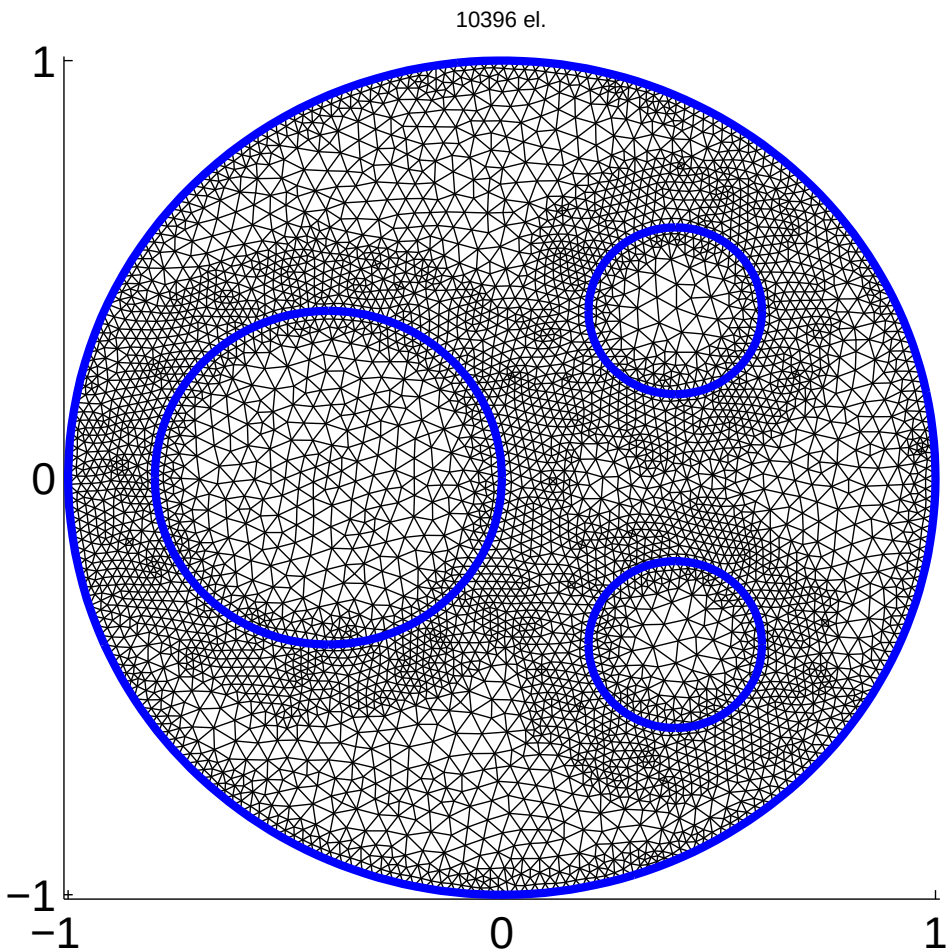

4: Film with three holes

Electric field $|\boldsymbol{e}|$ (shown for $b_e = 0.5$)

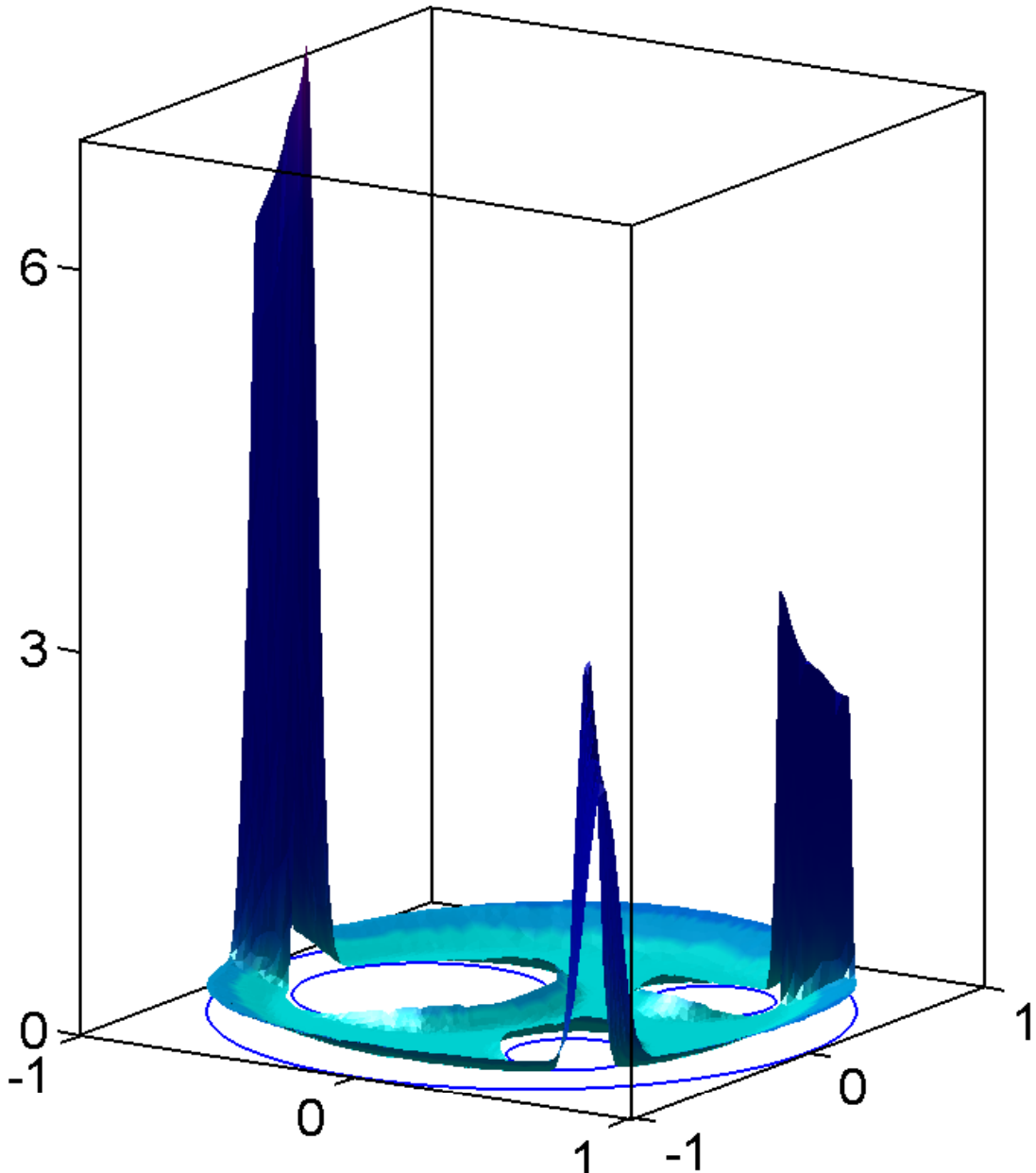

4: Film with three holes

Level contours of the normal to film magnetic field; $b_e = 0.5$

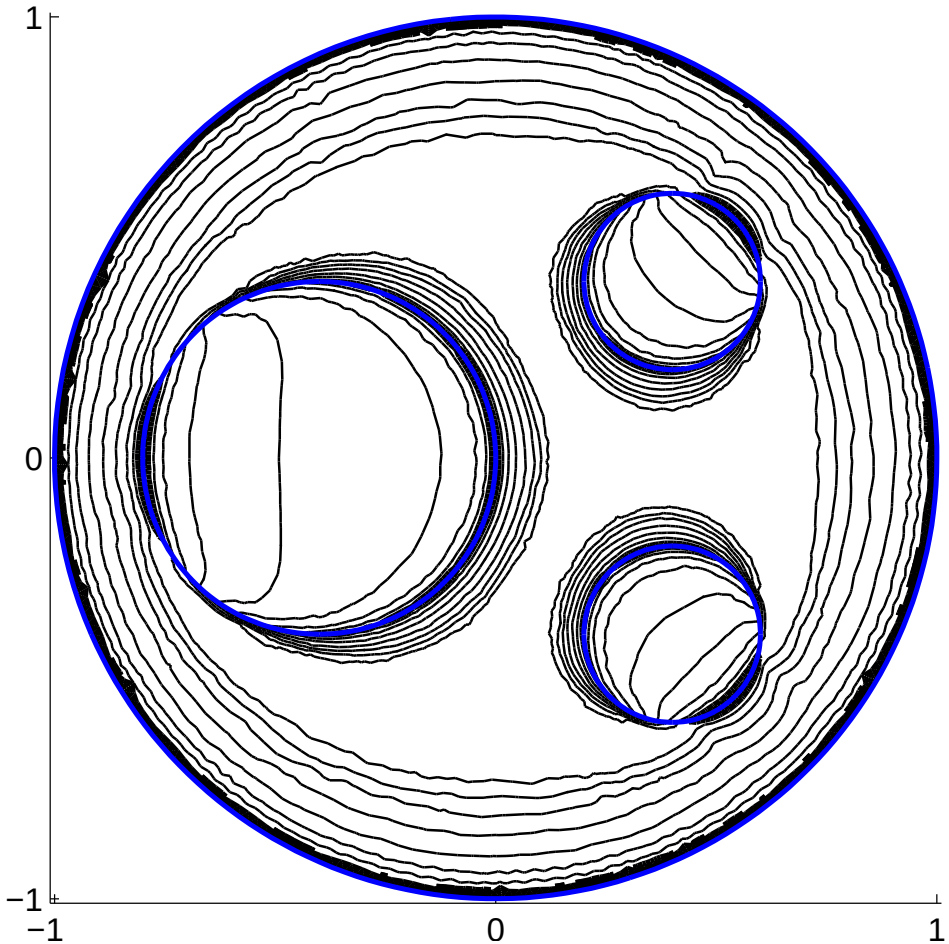

4: Film with three holes

Current streamlines, $b_e = 0.5$

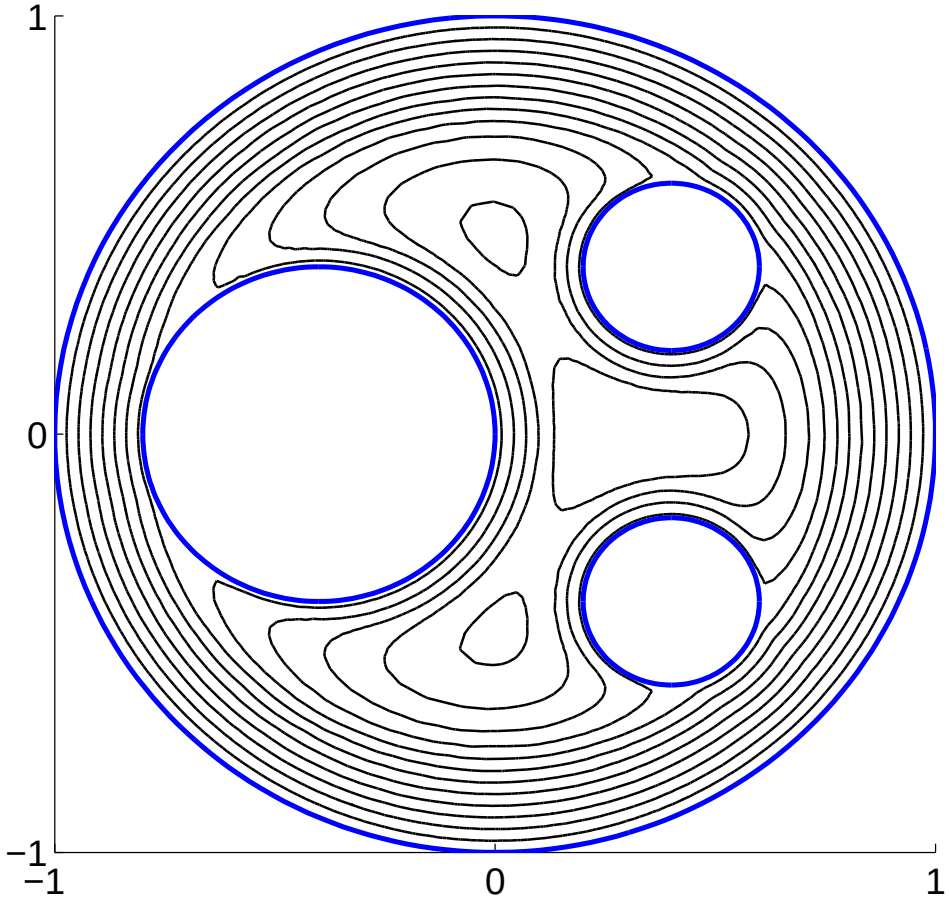

Transport current problems

Previously, such problems were solved only for an infinite strip: analytically (for the Bean model) or numerically; for strips this is a 1d problem. The leads which supply the current to the film should be taken into account.

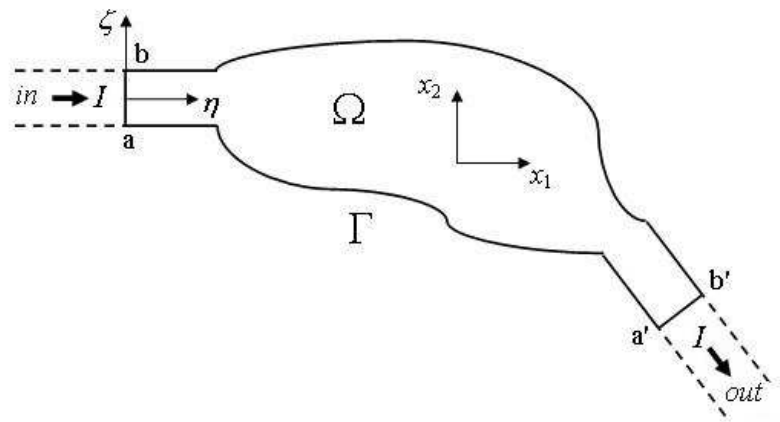

Solution: Far away from the film the current density in a lead is as in the infinite strip. We cut the leads far enough from the film and compute the current density on the cuts by solving the 1d problem; this determines the non-homogeneous Dirichlet b.c. for the stream function. Finally, we add to the external field the field induced by the known current in the cut-off semi-infinite leads.

Example: $I_{transp.} = 0.75 I_{max}$, $b_e = 0$.

Film with a hole ($j_c = 10^{-3}$ in the hole).
Mesh: 19,000 elements.
Current stream lines

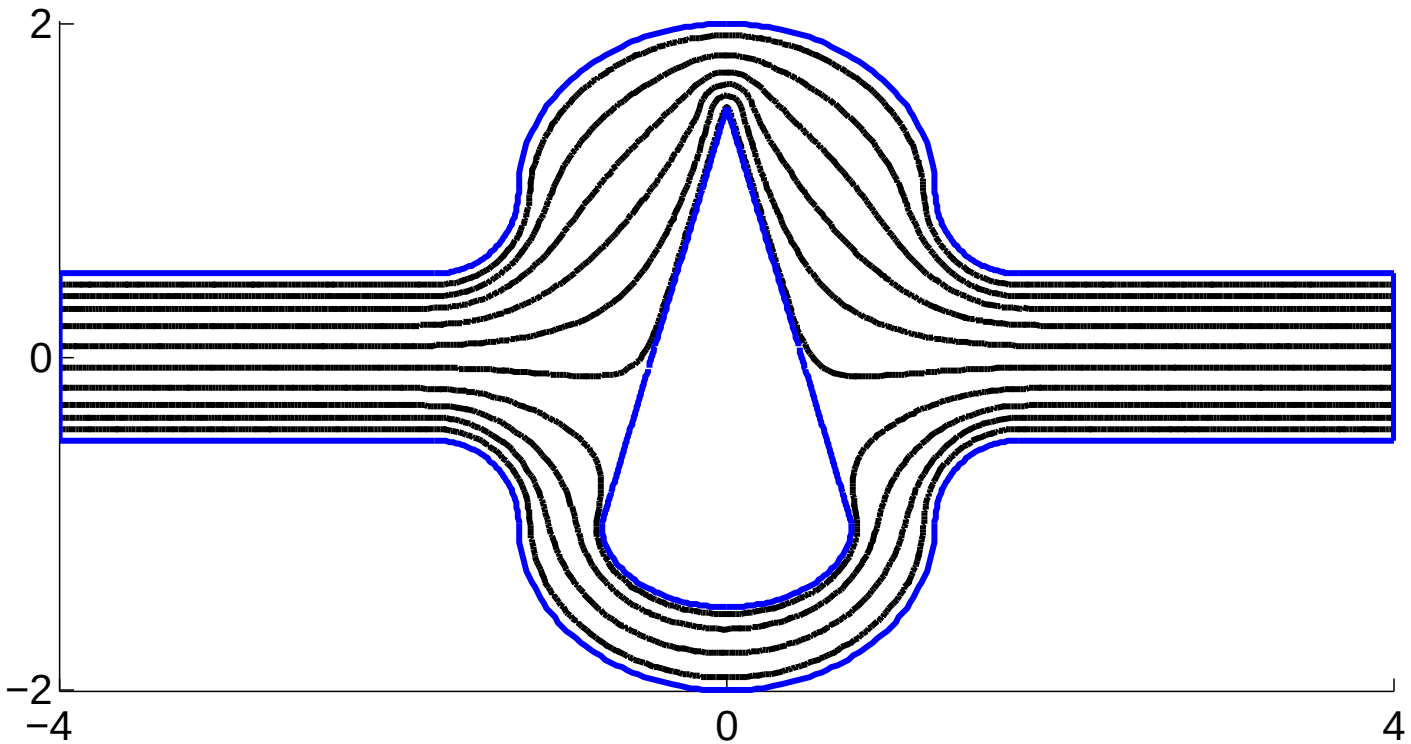

Example: $I_{transp.} = 0.75 I_{max}$, $b_e = 0$.

Modulus of the current density, $|\boldsymbol{j}|$

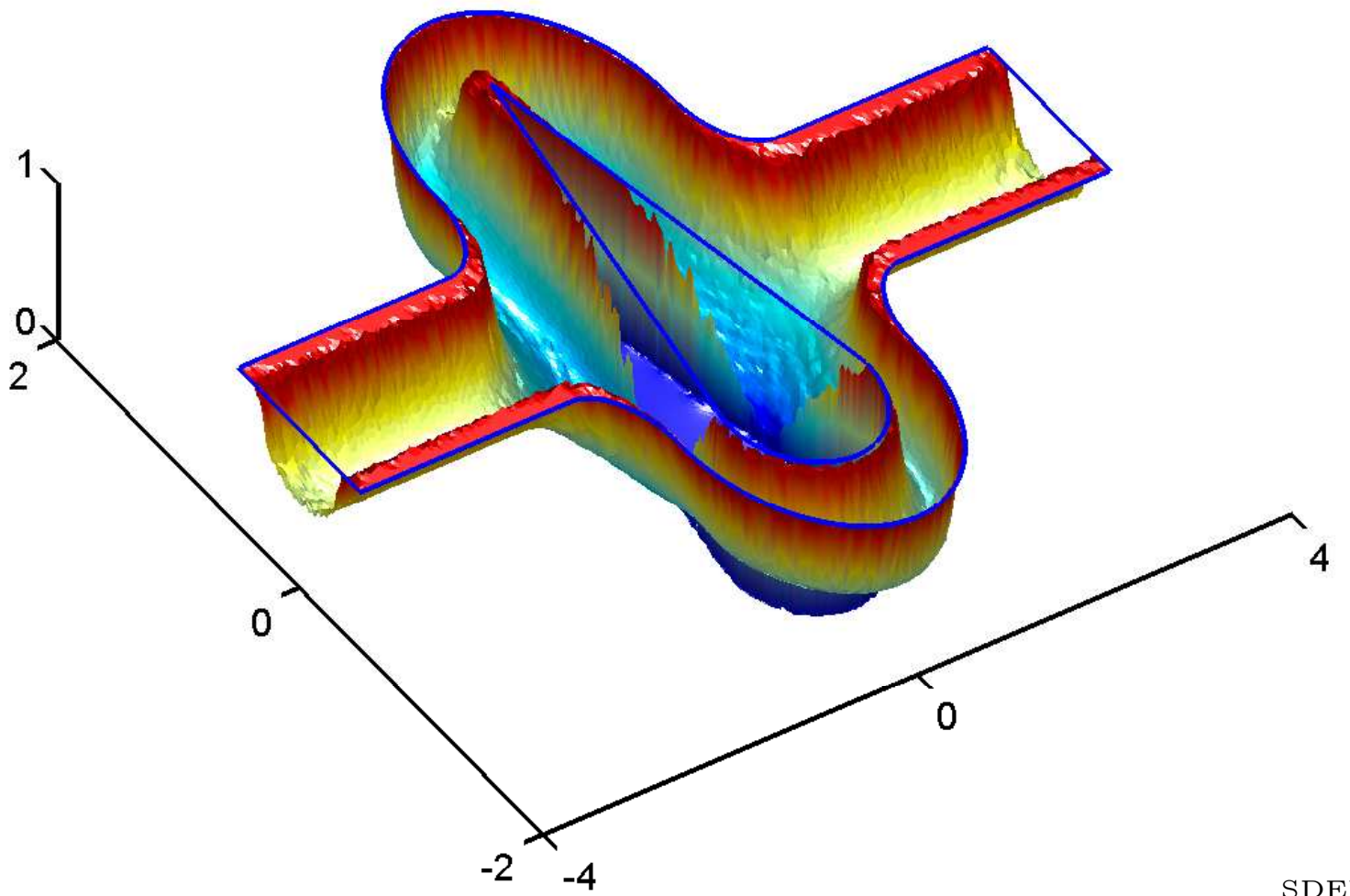

Example: $I_{transp.} = 0.75 I_{max}$, $b_e = 0$.

Modulus of the electric field, $|\boldsymbol{e}|$

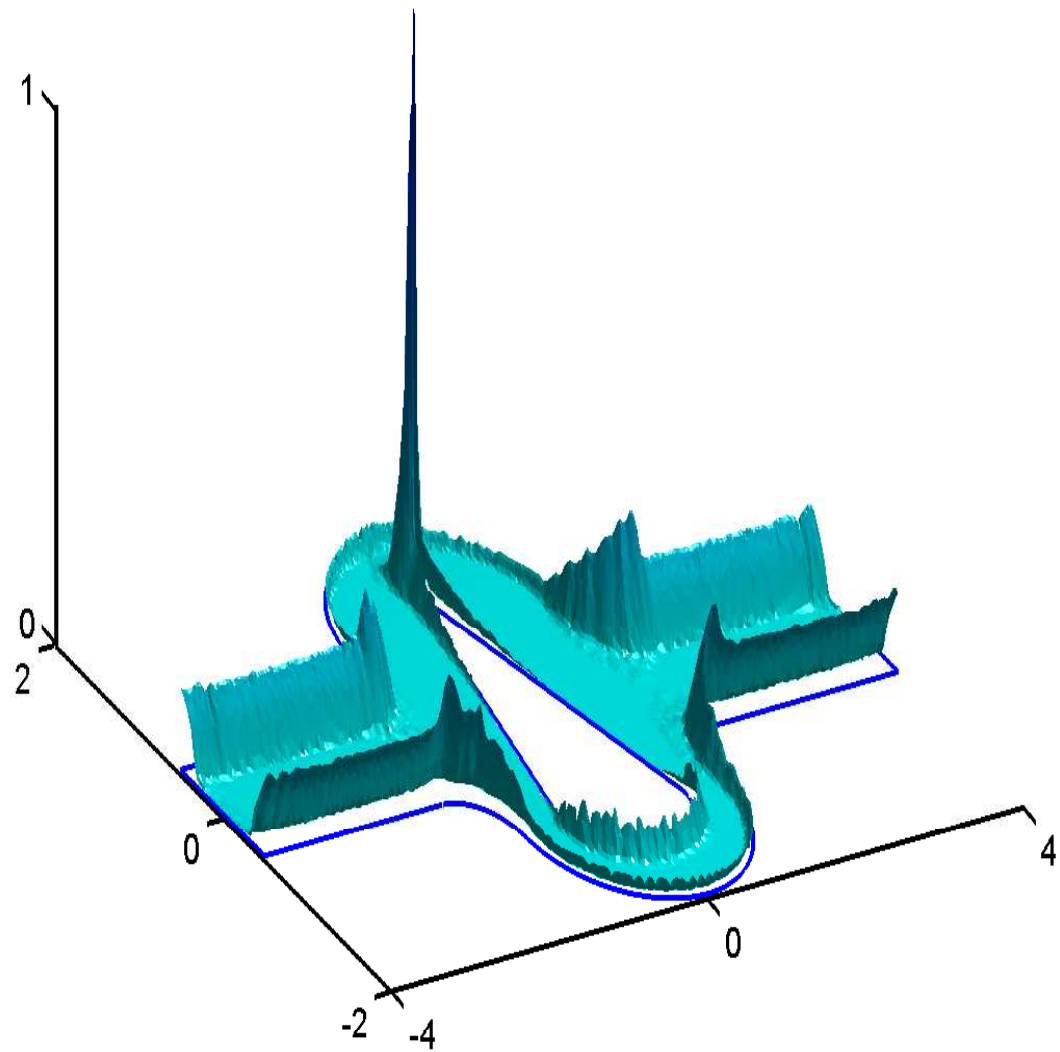

Example: $I_{transp.} = 0.75 I_{max}$, $b_e = 0$.

The normal to film magnetic field, b_3

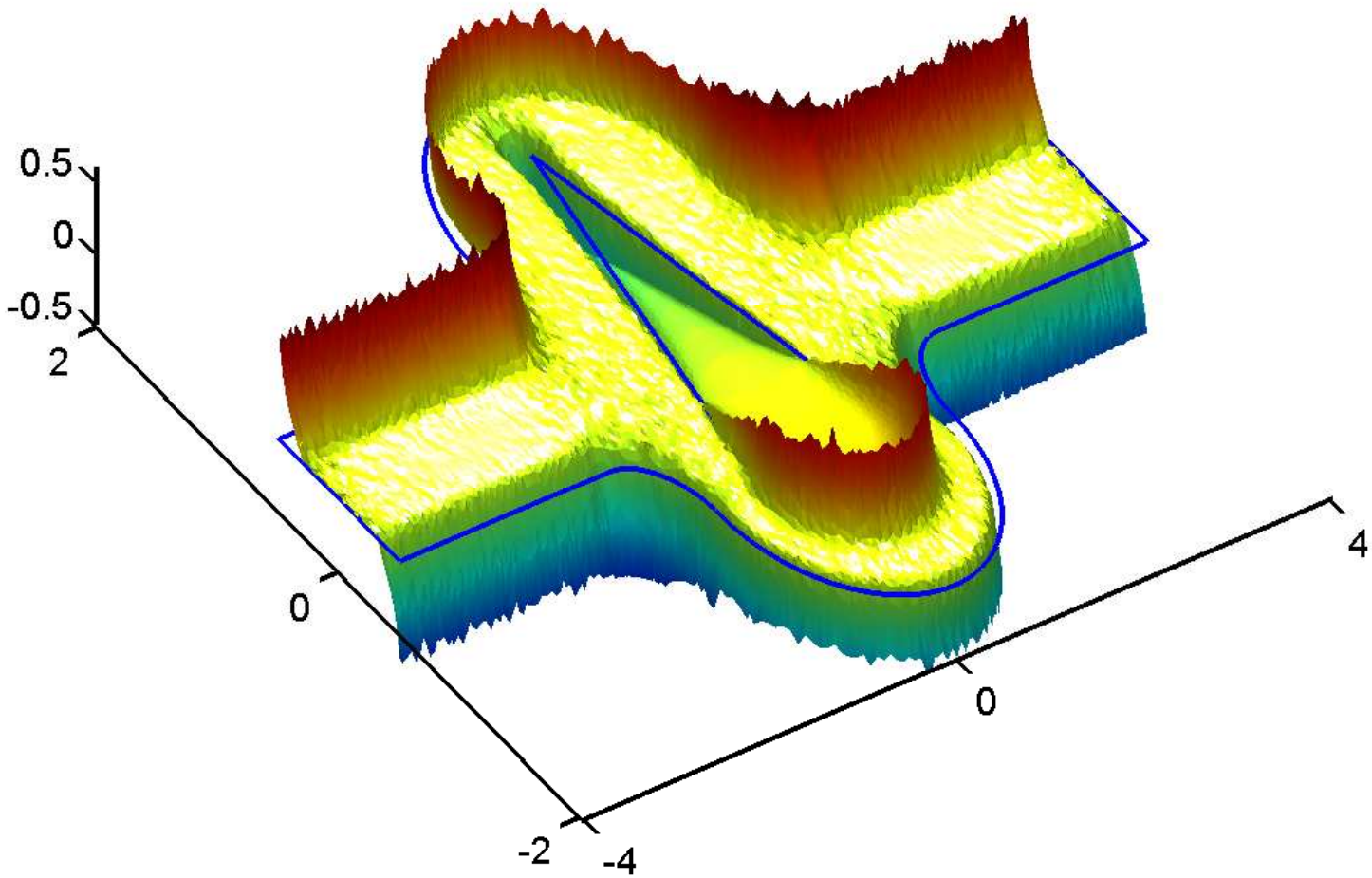

Conclusion

- The formulation of thin film magnetization problems in terms of the electric field AND scalar stream function is preferable to formulations written for the stream function alone. Its advantage is in simultaneous determination of the electric field and current density instead of computing the electric field by substitution of the current density approximation into the power law current-voltage relation. The latter approach is inaccurate if the power is high.
- Our numerical algorithm remains accurate for any power in the power law. For high powers we obtain a good approximation to the Bean model solution.

References: see www.math.bgu.ac.il/∼leonid

1. Barrett J. W. and Prigozhin L. Electric field formulation for thin film magnetization problems. Supercond. Sci. & Technol., 2012, v. 25, 104002
2. Barrett J. W. and Prigozhin L. Existence and approximation of a mixed formulation for thin film magnetization problems in superconductivity. Mathematical Models and Methods in Applied Sciences (M3AS). *To appear*
3. Barrett J. W., Prigozhin L. and Sokolovsky V. Transport current and magnetization problems for thin type-II superconducting films. Supercond. Sci. & Technol., 2013, v. 26, 105009.
4. Barrett J. W. and Prigozhin L. Sandpiles and superconductors: Nonconforming linear finite element approximations for mixed formulations of quasi-variational inequalities. *Submitted;* http://arxiv.org/abs/1306.4455

Thank you!